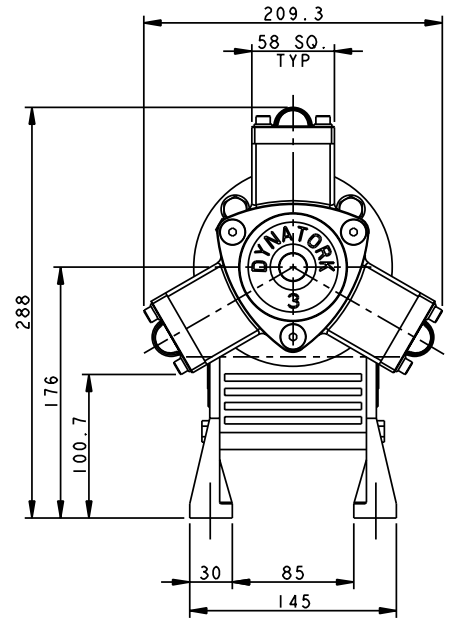

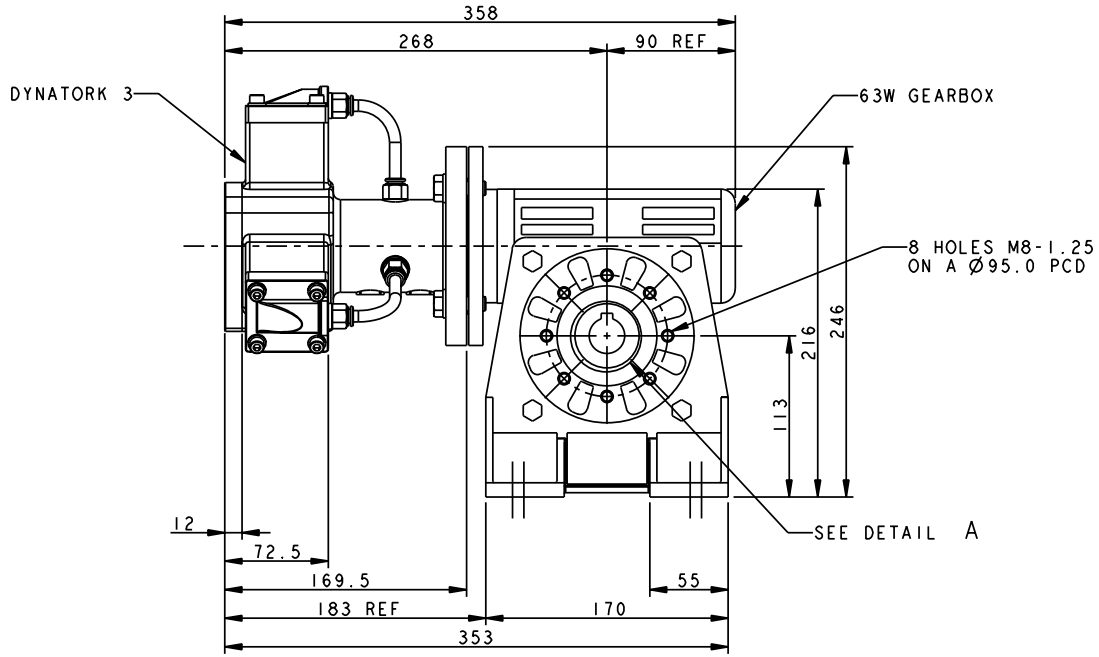

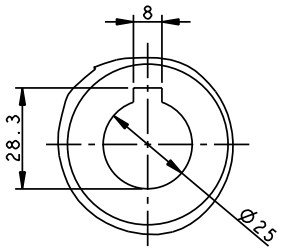

DETAIL A
SCALE 1:1

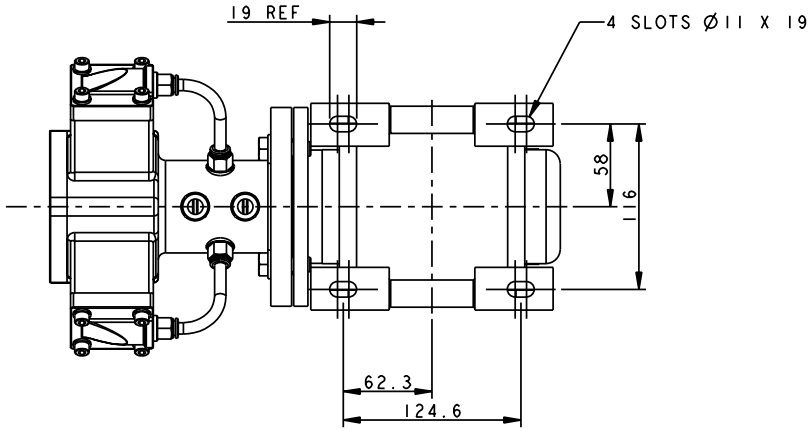

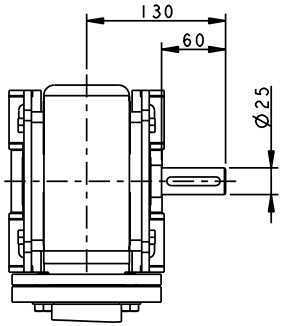

SINGLE-ENDED SHAFT
DETAILS

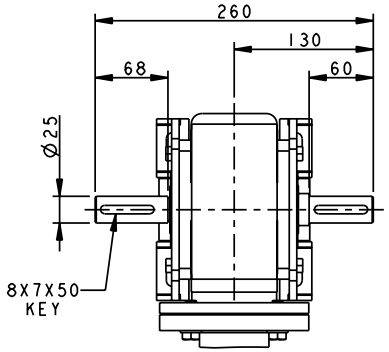

DOUBLE-ENDED SHAFT
DETAILS

ISS	DETAILS	INITIALS	DATE
A			

REMOVE SHARP EDGES | ALL DIMENSIONS IN MM | ✓ MACHINE TO 3.2um UNLESS OTHERWISE STATED | IF IN DOUBT, ASK!

TOLERANCING
UNLESS OTHERWISE STATED
0 NO DECIMAL PLACES ±0.5
0.0 ONE DECIMAL PLACE ±0.2
0.00 TWO DECIMAL PLACES ±0.1
ANGULAR ±1°

MATERIAL
N/A

A2

THIS DRAWING IS COPYRIGHT PROTECTED AND SHALL NOT BE REPRODUCED OR DISCLOSED TO A THIRD PARTY WITHOUT THE EXPRESS WRITTEN PERMISSION OF ENGINEERING PROJECT SERVICES

DYNATORK AIR MOTORS
TEL +44(0)115 969 2893
FAX +44(0)115 985 8768
WWW.DYNATORK.CO.UK
2 BENNETT RD, MAPPERLEY, NOTTINGHAM, NG3 6BQ

DRN BY AJH | CHK BY IT

TITLE
DYNATORK 63W3

SCALE	PROJECTION	DATE	PROJECT	DRAWING NUMBER	ISS
3:10	3RD ANGLE	06/02	DYNATORK3	D3_63W3_ALUM	